SPECIFICATION SHEET

PROJECT No:

"NON-IC" TYPE HOUSING

NW3000CM *120/12V*
NW3000CM2 *277/12V*
NW3000CM3 *347/12V*

yes

VOLTAGE **120, 277 or 347 VOLTS**

12 V 50W max.

EC 50M 50 VA 120V / 12V
EC 50M2 50 VA 277V / 12V
EC 50M3 50 VA 347V / 12V

TºC 130ºC No 033

Double top

UL number : **E 174023**

E Electronic **M** Magnetic **C** Short **L** Long

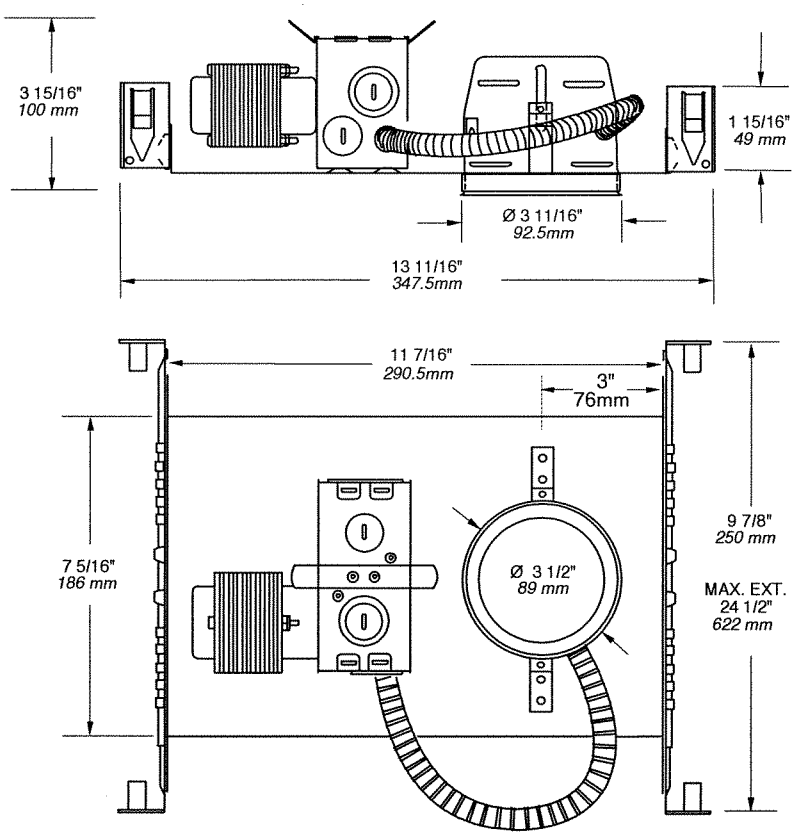

OD Cut : **3 3/4" (95 mm)**

NOTES:
For ceiling without insulation
Below ceiling access
Magnetic transformer available in 277/12V and 347/12V

LISTED
Certified UL Standards

PROJECT

Your Project: _____

Representative: _____

CONTRAST LIGHTING inc.

1009, rue du Parc Industriel. Saint-Jean-Chrysostome, Quebec. CANADA G6Z 1C5 Tel.: (418) 839-4624
Toll free fax : 1-877-839-7057 Email : infos@contrastlighting.com Website : www.contrastlighting.com

06 2005